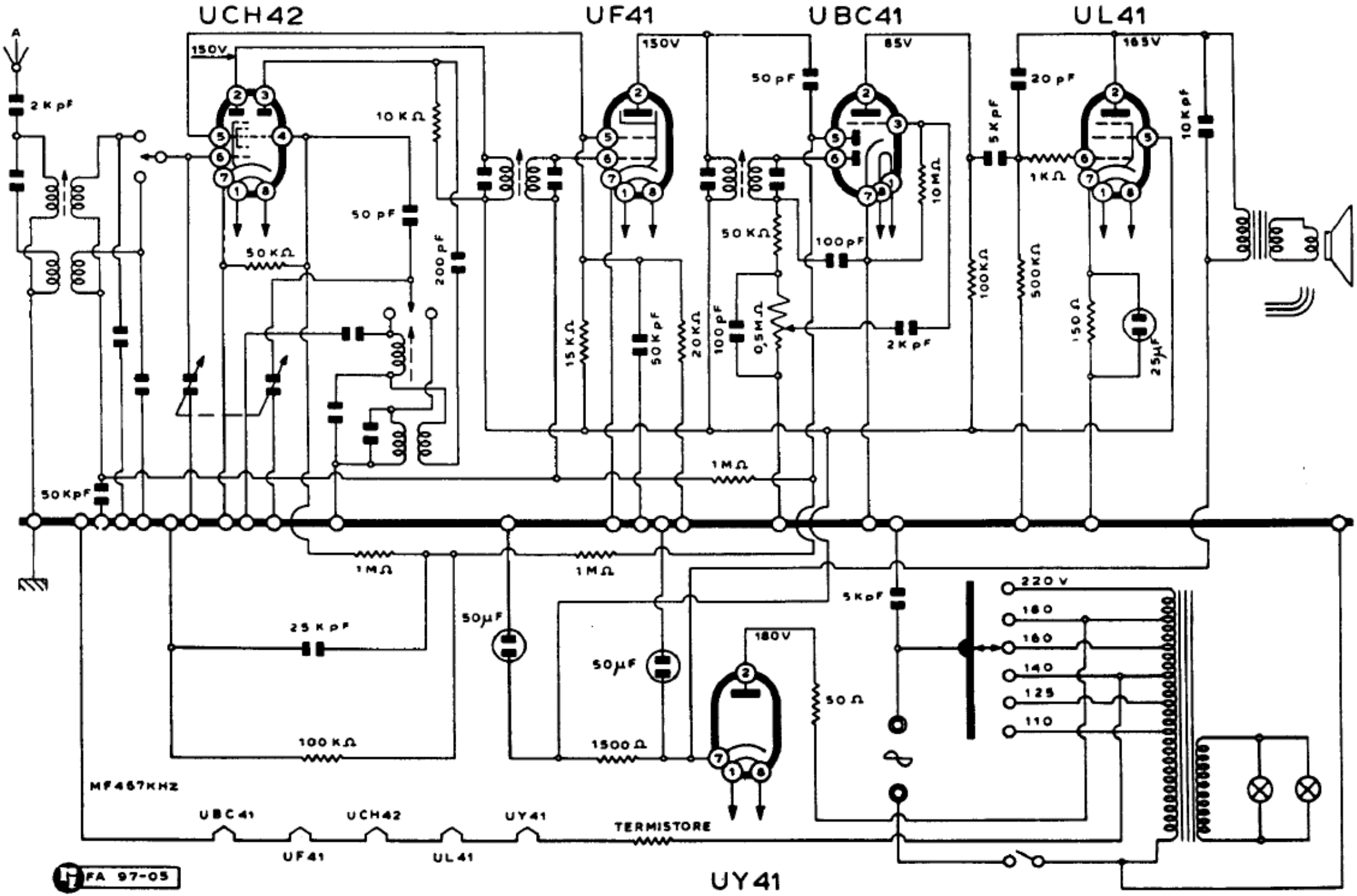

FAR SERENA - Mod. Romolo 425